MRI Compatible EEG System

Graduate Mentors: Aditya Balasubramanian, Jeff King, Brandon Gardner, Kausar Abbas Graduate Advisors: Prof. E. Nauman, Prof. L. Leverenz, Prof. T. Talavage
Undergraduate Team: Cody Cousins, Yi Zhou

Compact EEG System

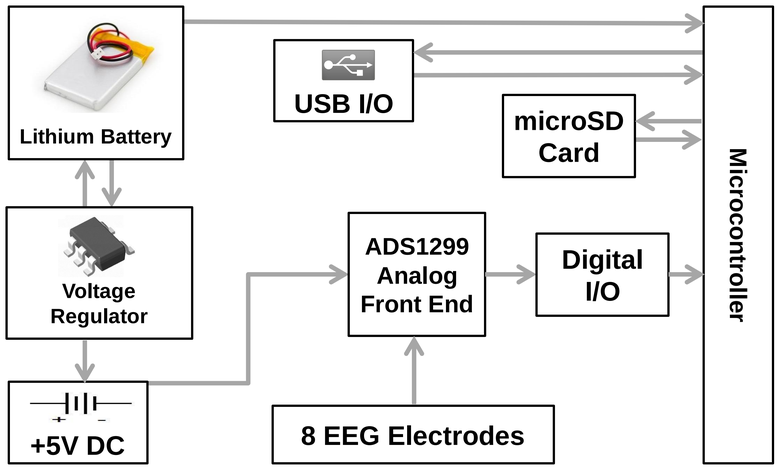

The prototype EEG system consists of three main sub-circuits:

The analog front end, consisting of eight EEG electrodes and the Texas Instruments ADS1299 Instrumentation Amplifier for biopotential measurements.

The power section, which regulates two 3.7V Lithium Ion batteries wired in series to +5V DC and +3.3V DC for the analog and digital portions of the circuit, respectively.

The digital I/O portion of the circuit, which sends data to the microcontroller via SPI interface and can output to either a microSD card or the development board's USB interface.

Microcontroller Development Board

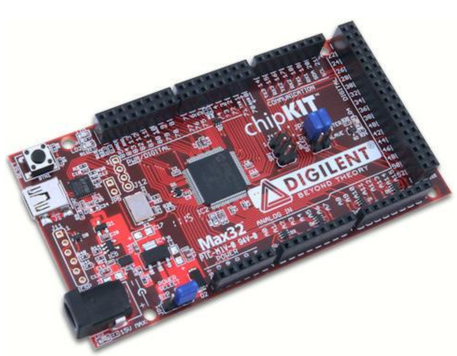

Microcontroller Development Board

The chipKIT Max32 is a microcontroller board based on the Microchip PIC32MX795F512L 32-Bit Microcontroller

Features:
- 128K RAM
- 512K Flash
- 10/100 Ethernet
- USB 2.0 OTG
- 83 I/0 Pins

Team Goals

- Provide relevant and understandable data to the Purdue neurotrauma group (**PNG**) to be used in studies aimed at quantifying the relationship between brain injuries sustained by players and the impacts they receive during a game.
- Apply lessons learned from previous designs into a ultra-compact, low cost **EEG** device that can be used in parallel with magnetic resonance imaging.
- Build a prototype EEG device with 8-channels using modern integrated circuits and low-power components while building on proven design techniques.
- Explore printed circuit board layout and microcontroller programming options for early prototypes of the EEG design using a microcontroller development board.
- Begin collecting real-time data from players during magnetic resonance imaging sessions.

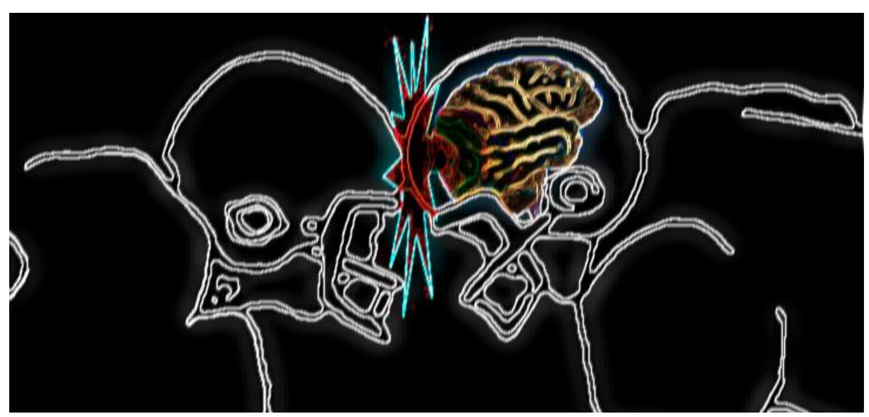

PCB Layout

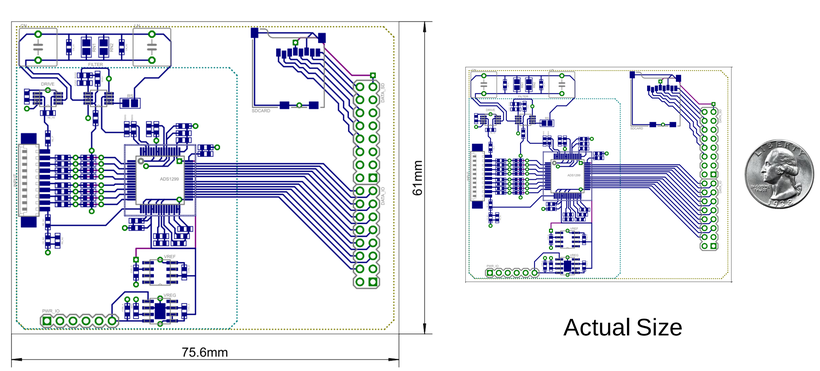

Proposed EEG PCB Layout

Actual Size

Magnetic Resonance Imaging

From the Journal of Neuroscience Methods

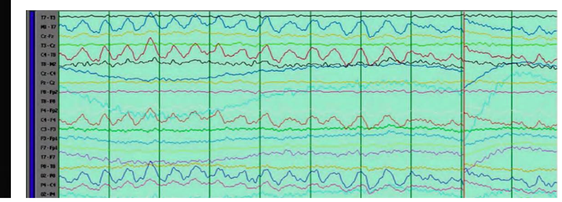

Data from player scans may be improved greatly with the addition of real-time electrical information from an EEG. Combining these readings (the **pattern** of activity) with MRI (the **location** of activity) will empower researchers to more precisely correlate changes in behavior with changes in the physical structure of the brain.

Objectives:
- Reduce the cost, footprint, and power consumption of a previously proven design.
- Search for new components that could reduce elements of the functional block diagram.

Block Diagram: Then and Now